WINDOW HEAD AND LINTEL

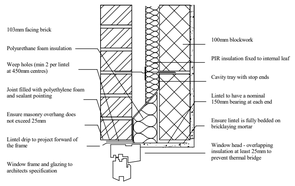

1 Window Head & Lintel
1 : 10

WINDOW REVEAL

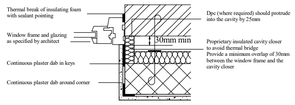

3 Window Head & Lintel
1 : 10

SOLID GROUND FLOOR

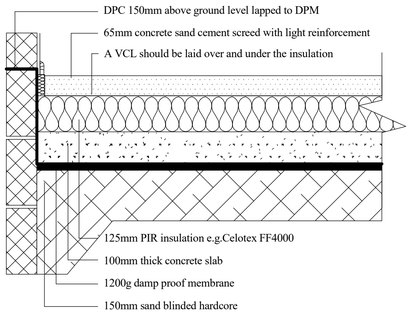

5 Solid Ground Floor
1 : 10

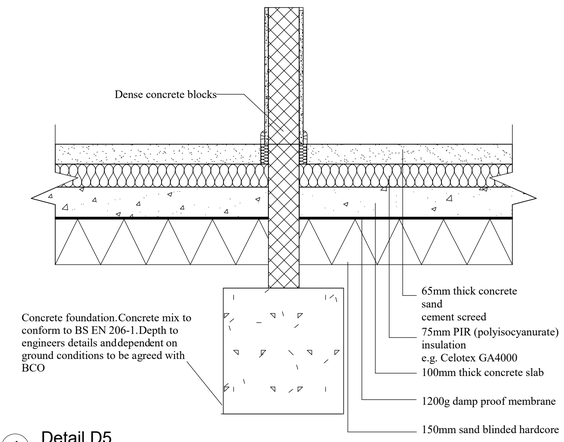

4 Detail D5
1 : 10

PARTIAL FILL CAVITY WALL

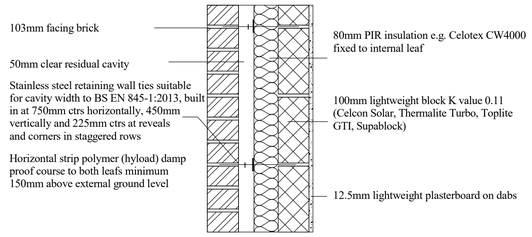

2 Partial Fill Cavity Wall
1 : 10

PITCHED ROOF AND WALL ABUTMENT

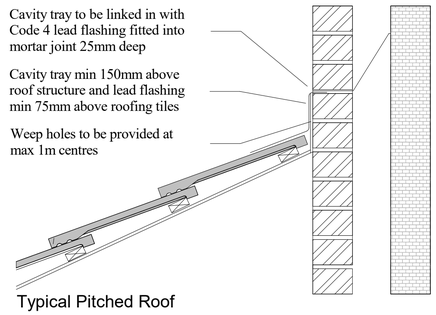

Typical Pitched Roof

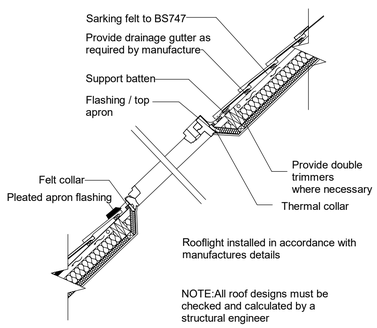

7 Typical Pitched Roof
1 : 25

FOUNDATIONS:
Standard 600x350 (1 x A142)

600x200 concrete strip foundations with one layer of A142 mesh top & bottom taken down to suitable bearing strata to satisfaction of Building Control Officer (BCO) and to have 450mm min. cover or directed by B.C.O.. Base of excavation to be blinded with 50mm lean mix concrete after BCO inspection. Any foundation in the vicinity to an existing drain to be taken down below the drain invert or as directed by the BCO. All concrete to be C30P mix minimum. 50mm minimum cover to reinforcement.

All foundation sizes, depths and concrete mixes are provisional until the Contractor has determined the sub-strata and Stuctural engineer and provided a destail design.

Note: Prior to excavating for the foundations, a trial hole should be dug to agree suitability of ground conditions with the BCO. If ground conditions are found to be inadequate and piled foundations are required they are to be designed by a structural engineer.

CONCRETE FLOOR SLAB: INSULATION BELOW U-value = 0.18 W/m²k
See Detail 6 for Slab build-up

EXTERNAL WALLS:

Built-up wall off foundation, 100mm thick blockwork outter leaf to 150mm below ground, then 100mm blockwork; 100mm cavity filled with fine concrete to ground level; and 100mm concrete block inner leaf up to dpc level. Insert Hyload pitch polymer dpc, minimum 150mm above ground level to both leaves, dress into existing dpc & new dpm.

External wall above dpc level to comprise of 102mm facing brick outer leaf to match existing), 80mm PIR Insulation (See Detail D1 tied to blockwork face with cavity, and 100mm blockwork inner leaf. 13mm plaster finish internally i.e. o/a wall construction 315.5mm (including plaster). Vertical twist stainless steel cavity ties to be to BS 1243 and spaced at 750 horizontal and 450 vertical centres (5 per sq m) and every course of blockwork at reveals, closures and movement/expansion joints. Total wall construction to have a U-value = 0.30 W/m²k. Horizontal DPC to be at least 150mm above ground level. Proprietary insulated vertical DPC by Thermabate or similar around window and door openings. Catnic or similar type combination insulated lintels over external openings. Weepholes to be placed over all openings at 450mm centres. Spanlyte lintels over all internal load-bearing openings.

INTERNAL WALLS: TIMBER STUDWORK
New stud walls to be 50x100 softwood studding at 400mm vertical centres with 100mm mineral wool insulation between with one layer of 12.5 plasterboard and skim to both sides.

INTERNAL WALLS: BLOCKWORK
All internal load-bearing walls to be 100mm medium density block with two coat plaster and skim 13mm thick or 12.5 plasterboard on dabs and skim to both sides.

STEELWORK
The contractor is to be responsible at all times for the overall safety of the works and existing structures. The contractor is to provide props, struts, scaffolding and shores as necessary to ensure the overall stability of the existing structure during the alteration work.
All steelwork to be sat on 150mm deep concrete padstones.
All steelwork to have 1 hour fire resistance.
All steelwork to be erected in accordance with BS5531 'Erecting Steelwork Frames' and all connections to be in accordance with BS5950: part 2: section
All steelwork to be galvanised to BS729 or blast cleaned at works and to have two coats of zinc phosphate primer.
Drawing read in conjunction with structural engineers drawings and details.

EW ROOF: WARM PITCHED ROOF CONSTRUCTION
EW ROOF: WARM FLAT ROOF CONSTRUCTION
U-value = 0.15 W/m²k.

WINDOWS/EXTERNAL DOORS: UPVC
All windows are to be double-glazed/Timber framed. All glazing to have low E coating and 20mm gap to give area average weighted and window sytem to achive U value of 1.6 w/m2K or less. All frames are to be proprietary UPVC system in oak effect, fitted with trickle ventilation, minimum 8000mm². The openings shall be controllable, secure and located so as to avoid undue draughts. Minimum openers to be 1/20th floor area. Laminated/ toughened to BS 6206 Safety glazing to be provided on all windows 800 or less from floor level and all glazed doors and door screens.

PART M: ENDORSEMENTS
New Corridors: Where a corridor is approached head on a clear width of 900mm should be observed. Should a radiator or other permanent obstruction intrude a corridor a width of 750mm is deemed to be acceptable within a 900mm corridor.
New Doors: A minimum clear opening width (i.e. between door and frame) of 750mm should be observed. Should a door not be approachable head on then a minimum width of 800mm should be observed. Principle entrance doors should be a minimum clear width of 775mm.
New Switches/Sockets: Fixtures should be fitted a maximum of 1200mm high, new sockets should be fixed 450mm from floor level (all floors).
Level Access: Where level access is not available a ramp of maximum 1 in 12 gradient must be included. Handrails to provided if total height of ramp is above 600mm and should be 900mm above ramped area and 1000mm above landing areas.
Level Access: Level access should be provided at a maximum 1 in 20 gradient. Paving (not loose stone) should be provided from the boundary of the site and any car parking designated for disabled people to the principal entrance door and should be at least 900mm wide.

MECHANICAL VENTILATION:
En-suite/Bathroom to have 30 litres per second air change provided by mechanical extraction with 15 min over run. Kitchen to have mechanical extraction to external air to provide 60 litres per second air change. Utility to have mechanical extraction to external air to provide 30 litres per second air change

FLUE: GAS APPLIANCES
In the case of a gas fire up to 6 KW, a circular flue of 110mm internal diameter or 12000 sq mm. A solid fuel effect gas fire shall meet the requirements of BS 6714:11986 or British Gas bye-laws. The flue outlet should be sited 600mm from any opening into the building. Flue pipes should be double walled sheet metal and be sited at least 25mm from any combustible material, fitted inside class 1 type brick chimney. Any flue passing through a floor or roof should be separated from combustible material by a non-combustible sleeve enclosing an air space of at least 25mm around the flue pipe. Provide lead flashings at roof intersections. All gas and heating appliances to be design by specialist and installed by CORGI registered fitter and shall comply with gas safety regulations act 1984.
Sedbuk rating of new boilers to be 86%

SAP/SBEM CALCULATIONS
SAP Calculations will need to be provided by a qualified engineer and the results should be sent to the Building Control Officer for their approval.
The SAP energy rating is to be fixed in a conspicuous location in the dwelling not more than 5 days after that work has been completed and at least five days prior to the building being occupied.

AIR PERMEABILITY/PRESSURE TESTING
Air permeability and pressure testing will be required once the building is complete. The results should be sent to the Building Control Officer for their approval.

MEANS OF ESCAPE :
All doors are to be self closing half hour fire doors and to be fitted with smoke seals and intumescent strips.
Self contained mains operated smoke detectors on all floors to be linked together and have battery backup.
Heat detector linked to fire alarm system to the kitchen.
New escape windows to be min. 0.33 m2 with no dimensions smaller than 450mm clear opening and maximum height 1100mm.
Escape lighting to be installed to BS5266 Part 1
Fire Alarm detection system to be installed to BS5839 Part 1

DRAINAGE:
Matching uPVC 100mm gutter and 65mm rainwater pipe discharging into new roddable surface water drains. All new foul drainage to discharge into new roddable foul water/combined drains. 100 wc branch pipe to be at 2 degree fall. 32mm basin waste upto 1.7m long and 40mm over 1.7m, and 40 shower waste all to be securely clipped to wall/floor at 500mm centres. All appliances to have 50mm deepseal traps and anti-syphonic valves. All waste bends to be slow and branches to have swept tees. All new underground drainage to be 100mm dia UPVC flexible jointed pipes and to have 150 pea gravel bed and surround. R.C. lintels over drains passing through walls. All drain runs shown are assumed only and any variation on site to be agreed with the B.C.O. Contractor to check on site for separate system drainage and to connect to appropriate system.
Replace existing drains if found necessary.
The surface water should discharge into a soakaway located a minimum of 5m away from any building or road. A percolation test will be required to determine if a soakaway will be suitable. Any soil vent pipe open to outside air should terminate a minimum of 900mm above any opening into the building within 3m of the pipe.

ELECTRICS:
Efficient low energy lighting to be installed in en-suite/ utility room/ hall. All installations to be carried out by a suitably qualified person and should comply with I.E.E. regulations. All fitting to comply with the relevant British Standards. All electrical installations should be inspected and tested to confirm compliance with BS 7671: 2001 before being taken into service. A copy of the certificate should be forwarded to the Local Authority immediately following the completion of the electrical installation.

GENERAL:
All workmanship and materials to comply with current Building Regulations, Codes of Practice and British Standards. All structural timbers to be pressure impregnated with preservative e.g. Vac-Vac. All details and measurements to be checked and verified on site by Contractor before setting out any site or shop-work or ordering any materials or components. Any discrepancies to be reported to Building Surveyor. Contractor to notify BCO at each stage of the construction. Fire officers and Environmental Officers recommendations are to be implemented within the design. Any variation made by the Contractor/Building Owner to the above specification to be notified in writing to the Building Surveyor before work commences.

RWP
Aco Drain
Existing Building
Proposed Building

N

Rev	Description	Issued	Chk	Dwn
P01	First Issue	16/01/2026		
P02	Pitch roof replaces flat roof			

100 0 100 200 300 400 500
SCALE 1: 10 mm

Project
Proposed kitchen extension and changes to internal layout (Kitchen to Bedroom) for Mr Mohammad Mehdi Madadi -34 Stanway Rd Whitefield, Manchester M45 8FX

Scale	Date	Drawn	Checked
	25/08/26	-	-

Drawing Title
Proposed Kitchen Extension_P01

Drawing No.		Rev.
9001	02	1