NOTES:

1. FOR GENERAL NOTES REFER TO RENAISSANCE DRAWING FS1013-REN-01-00-D-CC-5210 . FOR DRAINAGE NOTES REFER TO FS1013-RAN-01-XX-D-C-5301.
2. DO NOT SCALE FROM THIS DRAWING. ANY AMBIGUITIES OMISSIONS AND ERRORS ON DRAWINGS SHALL BE BROUGHT TO THE ENGINEERS ATTENTION IMMEDIATELY. ALL DIMENSIONS TO BE CHECKED/ VERIFIED ON SITE.

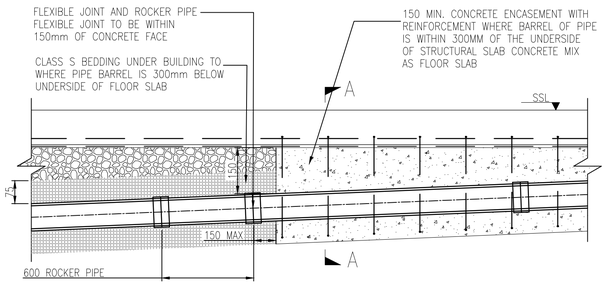

PIPE WORK BENEATH STRUCTURAL SLAB

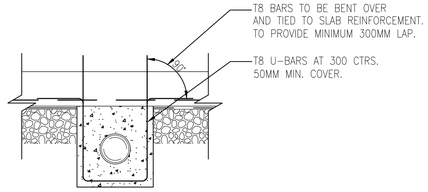

SECTION 'A-A'

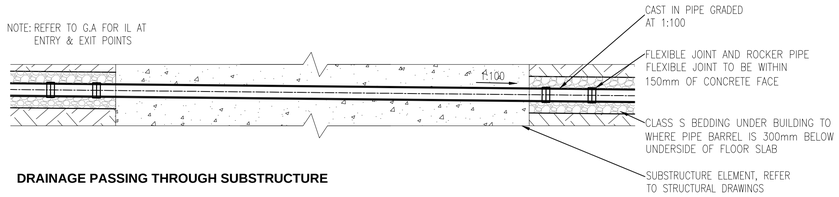

DRAINAGE PASSING THROUGH SUBSTRUCTURE

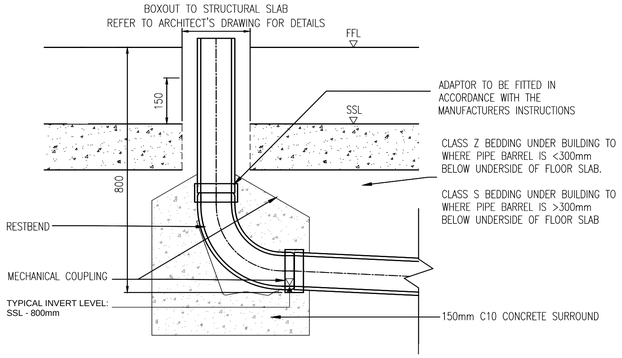

TYPICAL REST BEND DETAIL

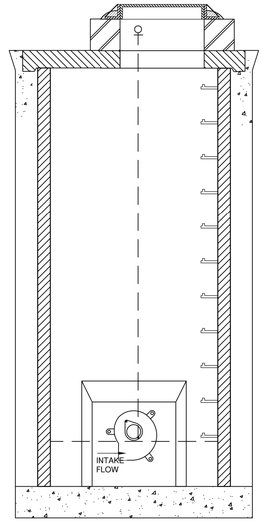

SECTION A-A

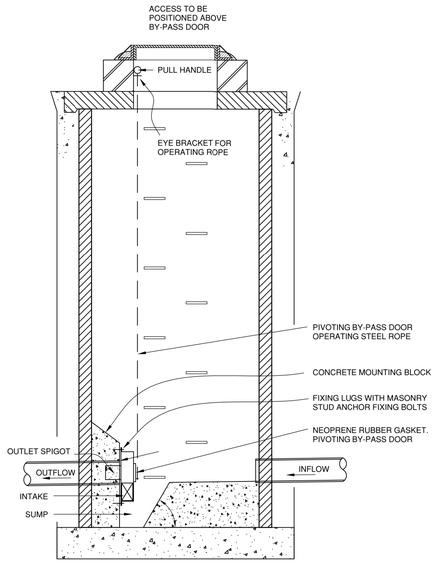

SECTION B-B

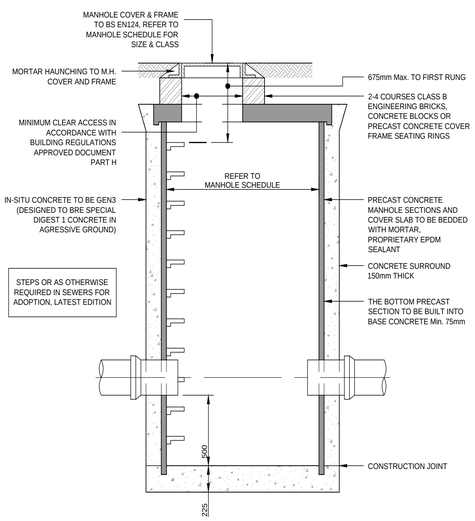

MANHOLE - SILT TRAP

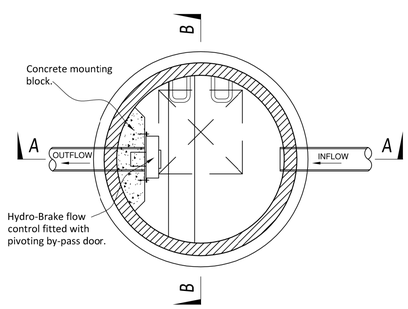

TYPICAL PLAN OF HYDRO-BRAKE MANHOLE

Rev:	Description:	Date:	By:	Chkd:
P02	REVISED TO SUIT CLIENT COMMENTS	06.02.24	SA	PW
P01	STAGE 4 ISSUE	08.12.23	SA	PW

renaissance

Renaissance Associates Ltd
Carvers Warehouse
77 Dale Street
Manchester
M1 2HG

Project:

STAR RADCLIFFE ACADEMY, BURY

Drawing Title:

BELOW GROUND DRAINAGE DETAILS SHEET 3

Status:

STAGE 2

Size:	Date:	Drawn by:	Designed by:	Checked by:
A1	DEC'23	SA	--	PW

Scale:	Project No:
NTS	2303-02

Project - Originator - Volume - Level - Type - Role - Number:	Revision:
FS1013-REN-EX-XX-D-C-5303	P02

This drawing has been prepared for the sole benefit, use and information of the client for the purpose set out in the instructions commissioning it. The liability of **renaissance** in the respect of the information contained in this drawing will not extend to any third party. This document should not be used in whole or part by any third parties without the express written permission of **renaissance**